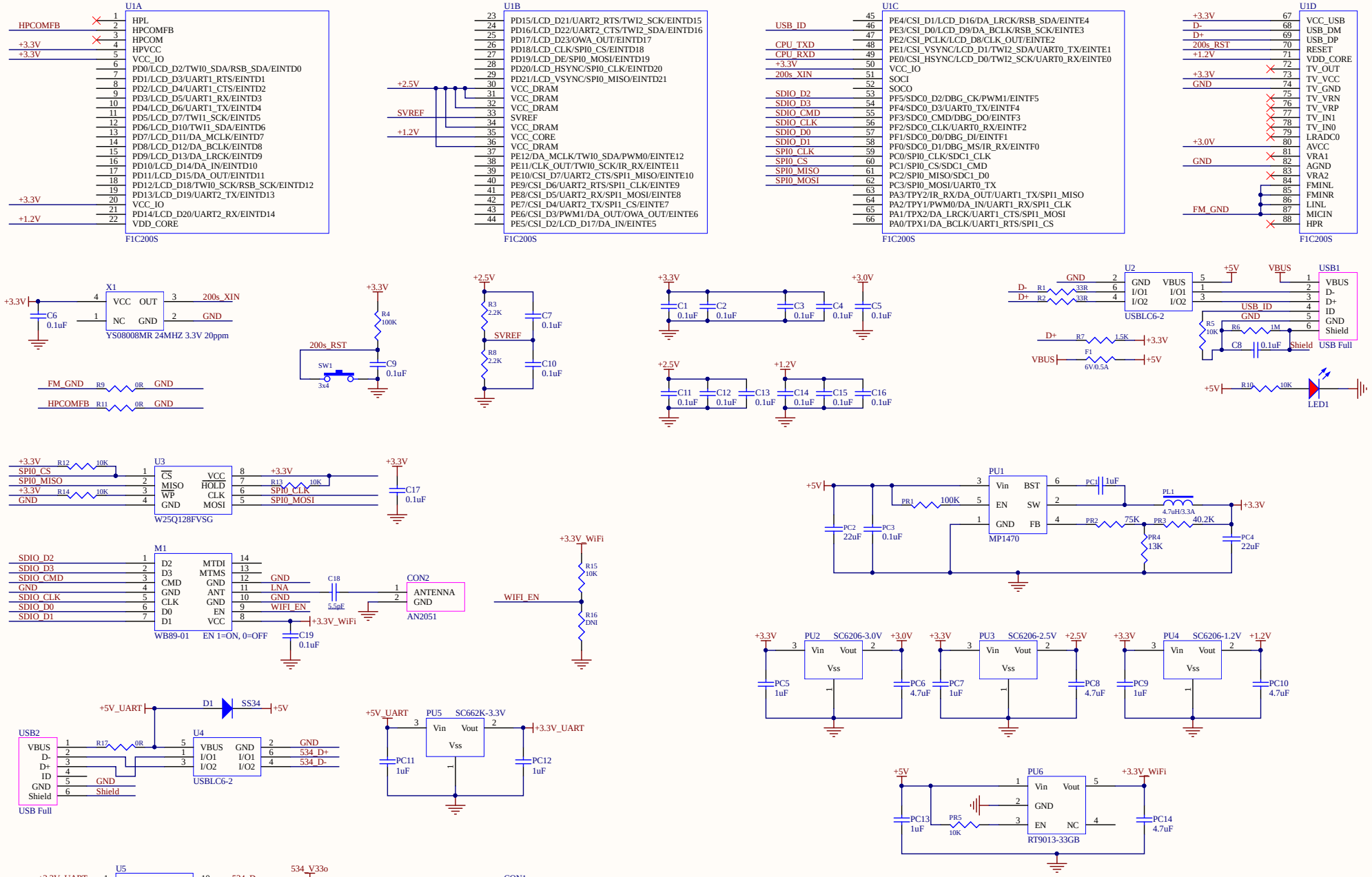
U1A
HPL
HPCOMFB
HPCOM
HPVCC
VCC_IO
PD0/LCD_D2/TWI0_SDA/RSB_SDA/EINTD0
PD1/LCD_D3/UART1_RTS/EINTD1
PD2/LCD_D4/UART1_CTS/EINTD2
PD3/LCD_D5/UART1_RX/EINTD3
PD4/LCD_D6/UART1_TX/EINTD4
PD5/LCD_D7/TWI1_SCK/EINTD5
PD6/LCD_D10/TWI1_SDA/EINTD6
PD7/LCD_D11/DA_MCLK/EINTD7
PD8/LCD_D12/DA_BCLK/EINTD8
PD9/LCD_D13/DA_LRCK/EINTD9
PD10/LCD_D14/DA_IN/EINTD10
PD11/LCD_D15/DA_OUT/EINTD11
PD12/LCD_D18/TWI0_SCK/RSB_SCK/EINTD12
PD13/LCD_D19/UART2_TX/EINTD13
VCC_IO
PD14/LCD_D20/UART2_RX/EINTD14
VDD_CORE
F1C200S
U1B
PD15/LCD_D21/UART2_RTS/TWI2_SCK/EINTD15
PD16/LCD_D22/UART2_CTS/TWI2_SDA/EINTD16
PD17/LCD_D23/OWA_OUT/EINTD17
PD18/LCD_CLK/SPI0_CS/EINTD18
PD19/LCD_DE/SPI0_MOSI/EINTD19
PD20/LCD_HSYNC/SPI0_CLK/EINTD20
PD21/LCD_VSYNC/SPI0_MISO/EINTD21
VCC_DRAM
SVREF
VCC_CORE
PE12/DA_MCLK/TWI0_SDA/PWM0/EINTE12
PE11/CLK_OUT/TWI0_SCK/IR_RX/EINTE11
PE10/CSI_D7/UART2_CTS/SPI1_MISO/EINTE10
PE9/CSI_D6/UART2_RTS/SPI1_CLK/EINTE9
PE8/CSI_D5/UART2_RX/SPI1_MOSI/EINTE8
PE7/CSI_D4/UART2_TX/SPI1_CS/EINTE7
PE6/CSI_D3/PWM1/DA_OUT/OWA_OUT/EINTE6
PE5/CSI_D2/LCD_D17/DA_IN/EINTE5
U1C
PE4/CSI_D1/LCD_D16/DA_LRCK/RSB_SDA/EINTE4
PE3/CSI_D0/LCD_D9/DA_BCLK/RSB_SCK/EINTE3
PE2/CSI_PCLK/LCD_D8/CLK_OUT/EINTE2
PE1/CSI_VSYNC/LCD_D1/TWI2_SDA/UART0_TX/EINTE1
PE0/CSI_HSYNC/LCD_D0/TWI2_SCK/UART0_RX/EINTE0
VCC_IO
SOCI
SOCO
PF5/SDC0_D2/DBG_CK/PWM1/EINTF5
PF4/SDC0_D3/UART0_TX/EINTF4
PF3/SDC0_CMD/DBG_DO/EINTF3
PF2/SDC0_CLK/UART0_RX/EINTF2
PF1/SDC0_D0/DBG_DI/EINTF1
PF0/SDC0_D1/DBG_MS/IR_RX/EINTF0
PC0/SPI0_CLK/SDC1_CLK
PC1/SPI0_CS/SDC1_CMD
PC2/SPI0_MISO/SDC1_D0
PC3/SPI0_MOSI/UART0_TX
PA3/TPY2/IR_RX/DA_OUT/UART1_TX/SPI1_MISO
PA2/TPY1/PWM0/DA_IN/UART1_RX/SPI1_CLK
PA1/TPX2/DA_LRCK/UART1_CTS/SPI1_MOSI
PA0/TPX1/DA_BCLK/UART1_RTS/SPI1_CS
U1D
VCC_USB
USB_DM
USB_DP
RESET
VDD_CORE
TV_OUT
TV_VCC
TV_GND
TV_VRN
TV_VRP
TV_IN1
TV_IN0
LRADC0
AVCC
VRA1
AGND
VRA2
FMINL
FMINR
LINL
MICIN
HPR
X1
VCC
OUT
NC
GND
YS08008MR 24MHZ 3.3V 20ppm
200s_RST
SW1
3x4
R4 100K
C9 0.1uF
R3 2.2K
R8 2.2K
C7 0.1uF
C10 0.1uF
C1 0.1uF
C2 0.1uF
C3 0.1uF
C4 0.1uF
C5 0.1uF
C11 0.1uF
C12 0.1uF
C13 0.1uF
C14 0.1uF
C15 0.1uF
C16 0.1uF
U2
USBLC6-2
USB1
USB Full
R1 33R
R2 33R
R5 10K
R6 1M
C8 0.1uF
R7 1.5K
F1 6V/0.5A
R10 10K
LED1
FM_GND
HPCOMFB
R9 0R
R11 0R
U3
W25Q128FVSG
CS
MISO
WP
HOLD
SPI0_CS
SPI0_MISO
SPI0_CLK
SPI0_MOSI
R12 10K
R13 10K
R14 10K
C17 0.1uF
M1
WB89-01
EN 1=ON, 0=OFF
SDIO_D2
SDIO_D3
SDIO_CMD
SDIO_CLK
SDIO_D0
SDIO_D1
MTDI
MTMS
ANT
LNA
WIFI_EN
C18 5.5pF
C19 0.1uF
CON2
ANTENNA
AN2051
+3.3V_WiFi
R15 10K
R16 DNI
WIFI_EN
PU1
MP1470
Vin
BST
EN
SW
FB
PC1 1uF
PL1 4.7uH/3.3A
PR1 100K
PR2 75K
PR3 40.2K
PR4 13K
PC2 22uF
PC3 0.1uF
PC4 22uF
PU2 SC6206-3.0V
PU3 SC6206-2.5V
PU4 SC6206-1.2V
Vout
Vss
PC5 1uF
PC6 4.7uF
PC7 1uF
PC8 4.7uF
PC9 1uF
PC10 4.7uF
+5V_UART
D1 SS34
USB2
R17 0R
U4
USBLC6-2
534_D+
534_D-
PU5 SC662K-3.3V
+3.3V_UART
PC11 1uF
PC12 1uF
PU6
RT9013-33GB
PC13 1uF
PR5 10K
PC14 4.7uF
U5
HT42B534
VDD
V33o
RTS
RX
VDDIO
CPU_TXD
CPU_RXD
534_V33o
C20 0.1uF
CON1
HDR1x3
Title
Size
A3
Number
Revision
Date: 2020-03-21
Sheet of
File: E:\PCB\设计资料\2020.3\F1C200S\Main.SchDoc
Drawn By: