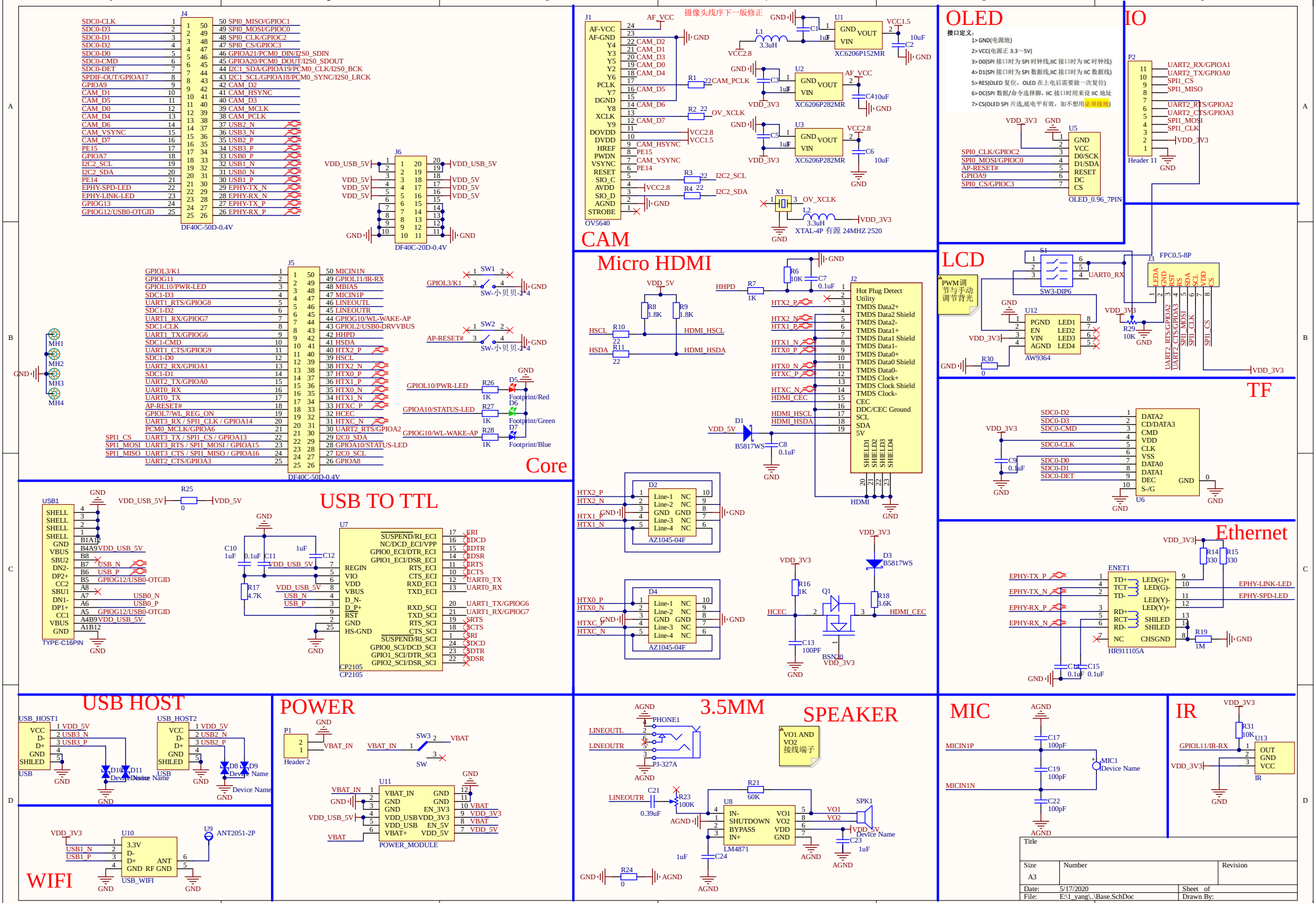
Core
J4
DF40C-50D-0.4V
J6
DF40C-20D-0.4V
J5
DF40C-50D-0.4V
MH1
MH2
MH3
MH4
SW1
SW-小贝贝-1
SW2
SW-小贝贝-1
D5
Footprint/Red
D6
Footprint/Green
D7
Footprint/Blue
CAM
摄像头线序下一版修正
J1
OV5640
U1
XC6206P152MR
U2
XC6206P282MR
U3
XC6206P282MR
X1
XTAL-4P 有源 24MHZ 2520
Micro HDMI
J2
Hot Plug Detect
Utility
TMDS Data2+
TMDS Data2 Shield
TMDS Data2-
TMDS Data1+
TMDS Data1 Shield
TMDS Data1-
TMDS Data0+
TMDS Data0 Shield
TMDS Data0-
TMDS Clock+
TMDS Clock Shield
TMDS Clock-
CEC
DDC/CEC Ground
SCL
SDA
5V
SHIELD1
SHIELD2
SHIELD3
SHIELD4
HDMI
D2
AZ1045-04F
D4
AZ1045-04F
D1
B5817WS
D3
B5817WS
Q1
BSN20
OLED
接口定义:
1> GND(电源地)
2> VCC(电源正 3.3~5V)
3> D0(SPI 接口时为 SPI 时钟线,IIC 接口时为 IIC 时钟线)
4> D1(SPI 接口时为 SPI 数据线,IIC 接口时为 IIC 数据线)
5> RES(OLED 复位，OLED 在上电后需要做一次复位)
6> DC(SPI 数据/命令选择脚，IIC 接口时用来设 IIC 地址
7> CS(OLED SPI 片选,底电平有效，如不想用必须接地)
U5
OLED_0.96_7PIN
IO
P2
Header 11
LCD
PWM调节与手动调节背光
S1
SW3-DIP6
U12
AW9364
J3
FPC0.5-8P
TF
U6
Ethernet
ENET1
HR911105A
USB TO TTL
USB1
TYPE-C16PIN
U7
CP2105
USB HOST
USB_HOST1
USB_HOST2
POWER
P1
Header 2
U11
POWER_MODULE
WIFI
U10
USB_WIFI
U9
ANT2051-2P
3.5MM
PHONE1
PJ-327A
SPEAKER
VO1 AND VO2 接线端子
U8
LM4871
SPK1
MIC
MIC1
Device Name
IR
U13
Title
Size
A3
Number
Revision
Date: 5/17/2020
Sheet of
File: E:\1_yang\..\Base.SchDoc
Drawn By: